VOCE MEDIA

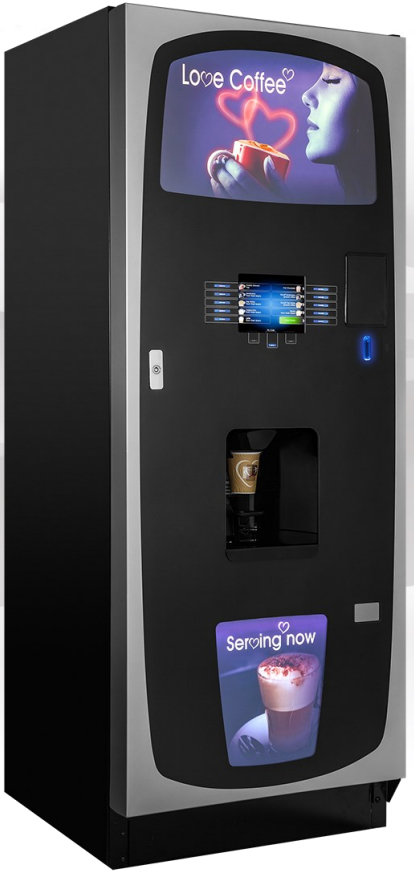

Parts Manual

Part Number: PR15325000

Issue: A - May 2016

EC Declaration of Conformity

We Crane Merchandising Systems (UK),
Of Pipsmore Park, Bumpers Farm Industrial Estate,
Chippenham, Wiltshire, UK, SN14 6NQ

Declare that:

Type of Equipment: Beverage Vending Machine
Model Name: VOCE

Has been designed and manufactured to comply with all essential requirements of the following Regulations/ Directives:

2006/95/EE	The Low Voltage Directive and its amending directives
2004/108/EEC	The Electromagnetic Compatibility Directive and its amending directives
2006/42/EC	Machinery Directive
REG. (EC) 1935/2004	On materials and articles intended to come into contact with food
REG. (EC) 10/2011	relating to plastic materials and articles intended to come into contact with foodstuffs.

The Essential Requirements of the European regulations for CE marking application are:

1. Mechanical resistance and stability
2. Safety in case of fire
3. Hygiene, health and the environment
4. Safety in use
5. Protection against noise
6. Energy economy and heat retention

Tests have been performed by accredited certification bodies in accordance with the following specifications:

Low Voltage Directive:	EN 60335-1: 2002+A1: 2004+A11:2004+A12:2006+A2: 2006 +A13:2008 EN 60335-2-75: 2004+A1:2005+A11:2006+A2:2008+A12:2010
EMC Directive:	EN 55014-1:2006 +EN 55014+A1: 2009+A2: 2011 EN 55014-2:1997+A120 EN 61000-3-2:2006+A1/A2:200 EN 61000-3-3:2008 EN 61000-4-2:2009 EN 61000-4-3:2012 EN 61000-4-4:2004 EN 61000-4-5:2006 EN 61000-4-11:2010

With regard to hygiene for foodstuffs in location, the operator must comply with 852/2004/EEC which lays out the general and specific hygiene rules to ensure a high level of consumer protection with regard to food safety.

Gillian White
Vice President, General Manager Global Coffee
Date: 04/08/2015

Ordering Spare Parts

1. Each assembly breakdown on the following pages contains an item description and part number.
2. Determine part number (s) needed by referring to drawing of assembly.
3. Email the spares department using **spares@cranems.co.uk** including a call back number in the event there is a question regarding your order.
4. Specify shipping address and any timed delivery requirements.

Should you have any order or part price enquiries please call the Spares Department on **01249667321 option 1**
For spare part number enquiries please call **01249667321 option 2** or **01249667323 option 2**

Technical Support

For technical assistance please call our helpdesk on **01249667323 option 1** or email **technicalsupport@cranems**.co.uk.

Please visit the Tech Zone of our web site **cranems.co.uk** to view and download technical and parts manuals

Table of Contents

Spare Parts .....

- Exterior View 5
- Interior View (Espresso) 7
- Inner Door Upper pre 2015 week 28 11
- Inner Door Upper post 2015 week 28 13
- Inner Door Lower 15
- Payment System 17
- Cup Drop Unit Assembly 21
- Interior Canister View – Single Fresh brew Tea 23
- Interior Canister View – Triple Fresh brew 25
- Interior Canister View – Bean to Cup 27
- Instant Canister Assembly 29
- Fresh Brew Canister Assembly 31
- Power Supply Assembly 33
- Dispense Head Assembly 35
- Mixing System 37
- Heater Tank Assembly 39
- Oltre Brewer 41
- CoEx® Brewer 43
- CoEx® Module Assembly 49
- Pressure Boiler Assembly 51
- Cold Unit 53
- Extract System 55
- Waste Bucket 56
- Refrigeration Components 57
- Additional Refrigeration Components – No Images 58
- CoEx ®Additional Parts - B2C Module Assembly 59
- Fixings & Fasteners 60

Exterior View

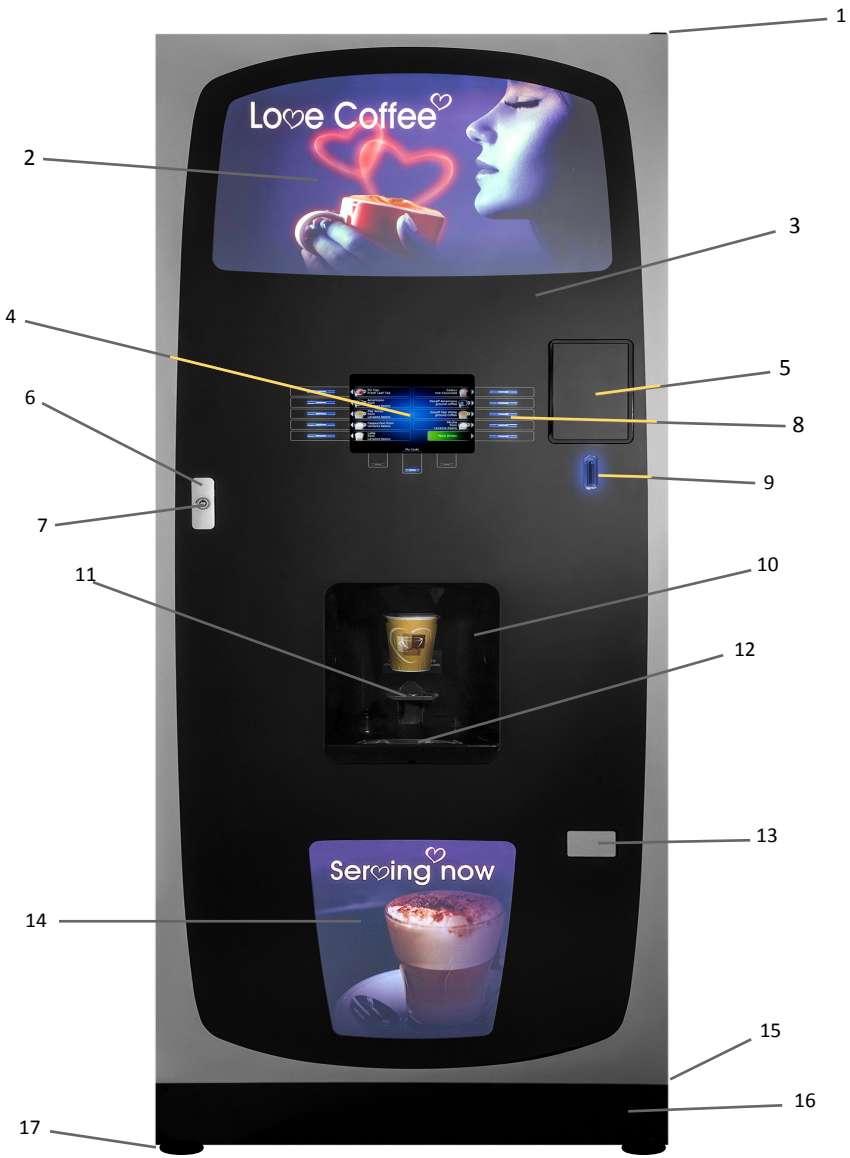

Exterior View Parts List

Ref No.	Part No.	Item Description
1	MT13868290	TOP HINGE
2	GR15194000	GRAPHIC PANEL UPPER LOVE COFFEE
3	GR14977000	PRINTED GLASS (include item 7 if glass required)
4	EL14295000	SCREEN 8.4” LCD
5	PAYMENT SYSTEM	SEE PAGE 17 FOR DETAILS
6	ME03150000	T-HANDLE, DOOR, CHROME
7	ME03200000	LOCK FOR T HANDLE c/w 2 KEYS 3704
8	EL14779000	ATM BUTTON PCB
9	CR0012773	COIN INSERT
10	PL13775000	VEND AREA
11	a) PL04589000	CUP STAND
	b) MT13975280	CUP STAND BRACKET
12	PL10274000	DRIP TRAY GRILL
13	a) PL13140000	COIN FLAP
	b) ME13141000	COIN FLAP GRAPHIC
14	GR15195000	GRAPHIC PANEL LOWER LOVE COFFEE
15	a) ME13222000	LOWER HINGE ASSEMBLY (not shown)
	b) FA13869000	BOLT M8x40 (Torx bit size TT40) (not shown)
	c) C4242145	LOWER HINGE THRUSH BEARING (not shown)
16	MT13239290	FRONT KICK PLATE
17	ME13244000	FOOT
	PL13786000	REJECT BUTTON (not shown)

Interior View

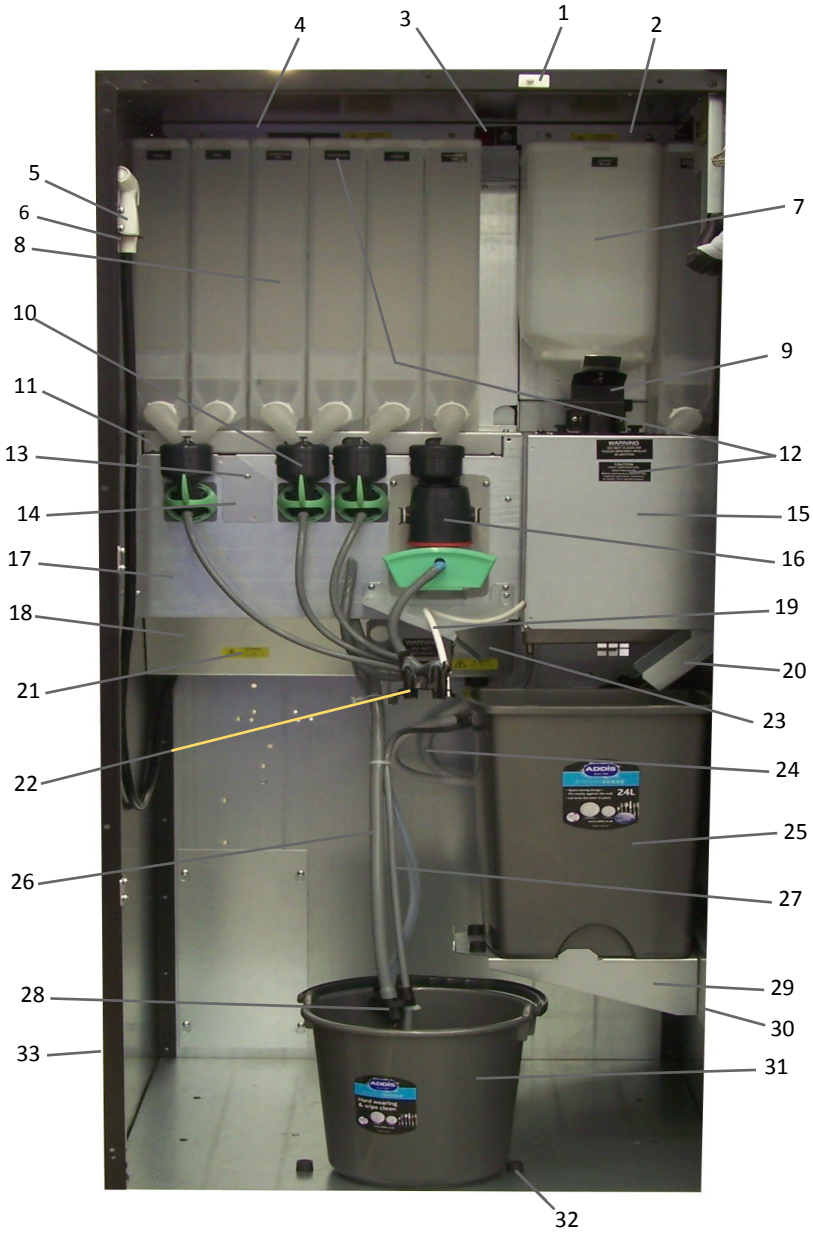

Interior View Parts List

Ref No.	Part No.	Item Description
1	C1236050	SWITCH
2	a) MT10662000	R/H BOILER COVER (B2C machines)
	b) MT13763000	R/H BOILER COVER (fresh brew/instant)
3	EL13317000	POWER SWITCH
4	MT13897000	L/H BOILER COVER
5	PH03674001	SPRAY HEAD ASSEMBLY C/W HOSE
6	MT11976290	SPRAY HEAD SUPPORT BRACKET
7	PL10792000	BEAN CANISTER
8	INSTANT CANISTER	SEE PAGE 29
9	CO-EX MODULE	SEE PAGE 49
10	MIXING SYSTEM	SEE PAGE 37
11	a) MT15007340	L/H EXTRACT TRAY (4 hole)
	b) MT15006340	L/H EXTRACT TRAY CO-EX (5 hole)
	c) MT13755340	L/H EXTRACT TRAY FRESH BREW (5 hole)
12	PR13330000	PART OF MACHINE DECAL SHEET
13	FA10807000	M4X10 POZIPAN SCREW
14	MT13766000	WHIP/BOWL BLANKING PLATE
15	MT10847000	B2C FRONT COVER
16	OLTRE BREWER ASSEMBLY	SEE PAGE 41
17	MT15002000	L/H MODULE FRONT PANEL
18	MT13038000	L/H LOWER COVER
19	SI10538000	4MM SILICONE PIPE
20	MT13323000	LONG COEX SIDE TRAY
21	PR01225000	WARNING LABEL
22	DISPENSE HEAD ASSEMBLY	SEE PAGE 35
23	MT13284000	LOWER RIGHT HAND COVER

Interior View Continued

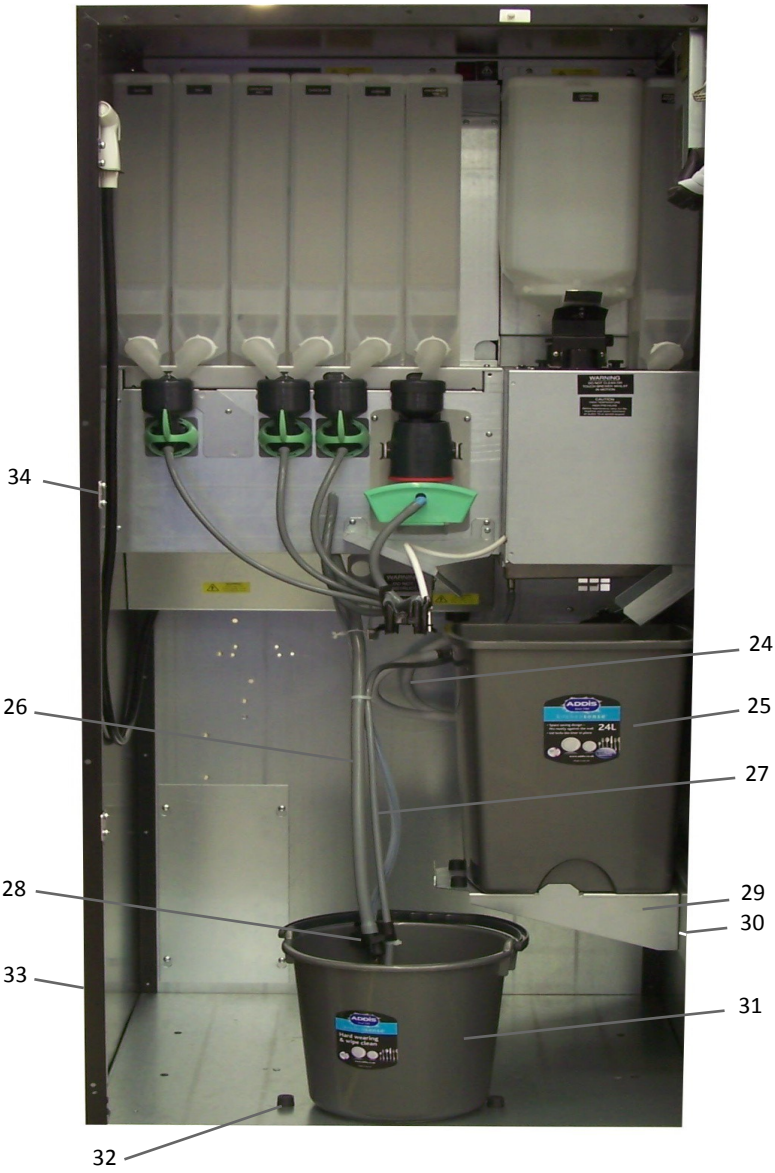

Interior View Parts List Continued

Ref No.	Part No.	Item Description
24	HO13228000	B2C INLET HOSE
25	PL06672000	FRESH BREW WASTE BUCKET
26	SI01142960	12MM SILICONE PIPE
27	SI04345960	6MM SILICONE PIPE
28	PA13590000	LEVEL PROBE ASSEMBLY
29	MT10739000	FRESH BREW TEA BUCKET STAND
30	MT13039000	BUCKET SUPPORT SIDE RAIL
31	PL01172000	BUCKET
32	FA14036000	BUCKET STOP
33	MT14180290	CAB ASSEMBLY
34	MT10636000	DOOR HOOK
	VA11337000	INLET VALVE (HOT ONLY MACHINES) (not shown)
	VA10769000	INLET VALVE (HOT AND COLD MACHINES) (not shown)

Inner Door Upper - Before S/N 2528-126361

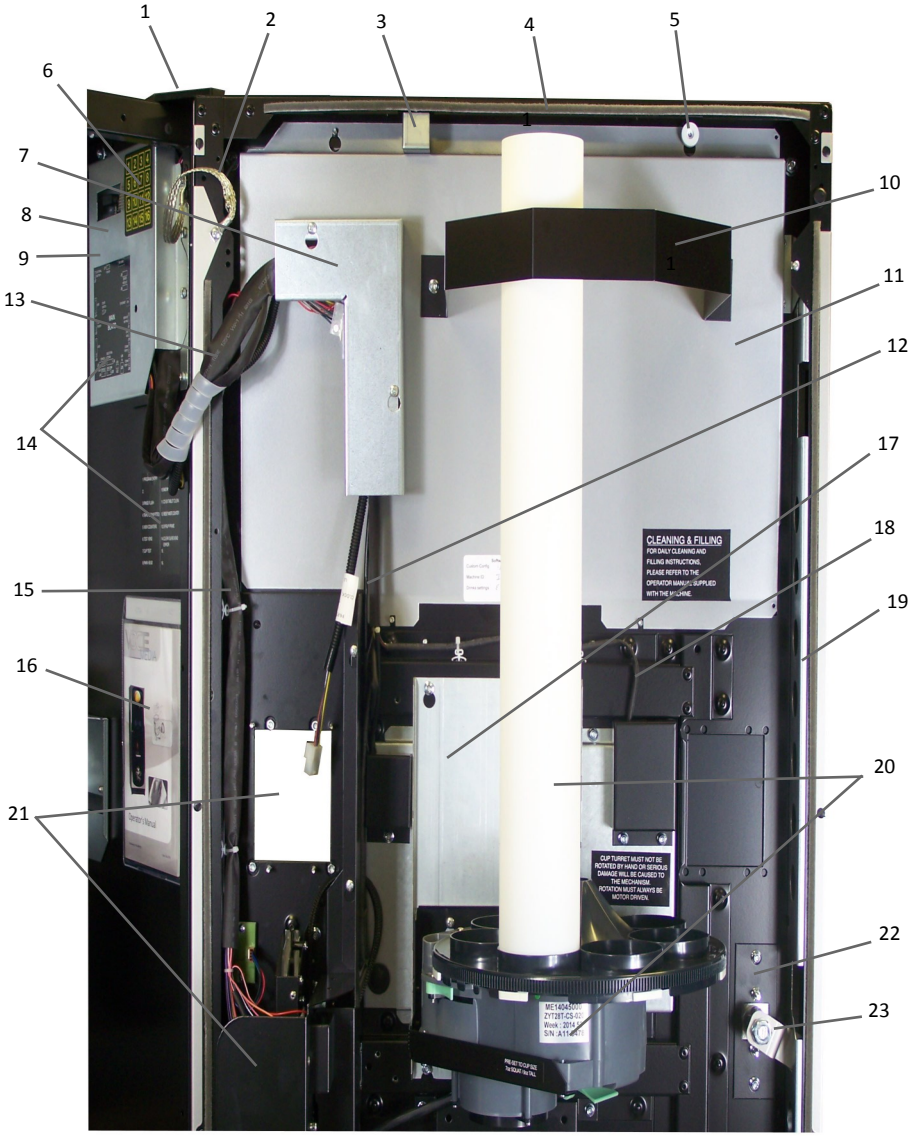

Inner Door Upper - Before S/N 2528-126361

Ref No.	Part No.	Item Description
1	MT13868290	TOP HINGE
2	LO05158000	EARTH BRAID
3	MT14176000	DOOR SWITCH ACTUATION BRKT
4	ME04373000	WEATHER STRIP GREY
5	FA01416000	M5 NYLON THUMB NUT
6	EL10025002	PROGRAMMING KEYPAD
7	MT14777000	DOOR LOOM COVER
8	EL13158002	CONTROL PCB (not shown)
9	MT14771000	MPU COVER
10	MT14808290	TURRET BAND
11	MT13797251	LED MOUNTING BRKT UPPER
12	LO14774000	DOOR LOOM
13	LO13108001	CABINET MAIN LOOM
14	PR13330000	INTERIOR DECAL SHEET
15	C9989706	MDB HARNESS
16	PR14987000	OPERATORS MANUAL
17	EL14779000	ATM BUTTON PCB, WHITE (not shown)
18	LO15066000	LOOM - LVDS TO DISPLAY
19	MT13805000	LOCKBAR
20	CUP DROP SYSTEM	SEE PAGE 21
21	PAYMENT SYSTEM	SEE PAGE 17
22	MT14928290	LOCK PLATE T-HANDLE
23	MT14984000	LOCK CAM
	MT14769000	DISPLAY MOUNTING BRACKET ASSEMBLY (not shown)

Inner Door Upper - After S/N 2528-126361

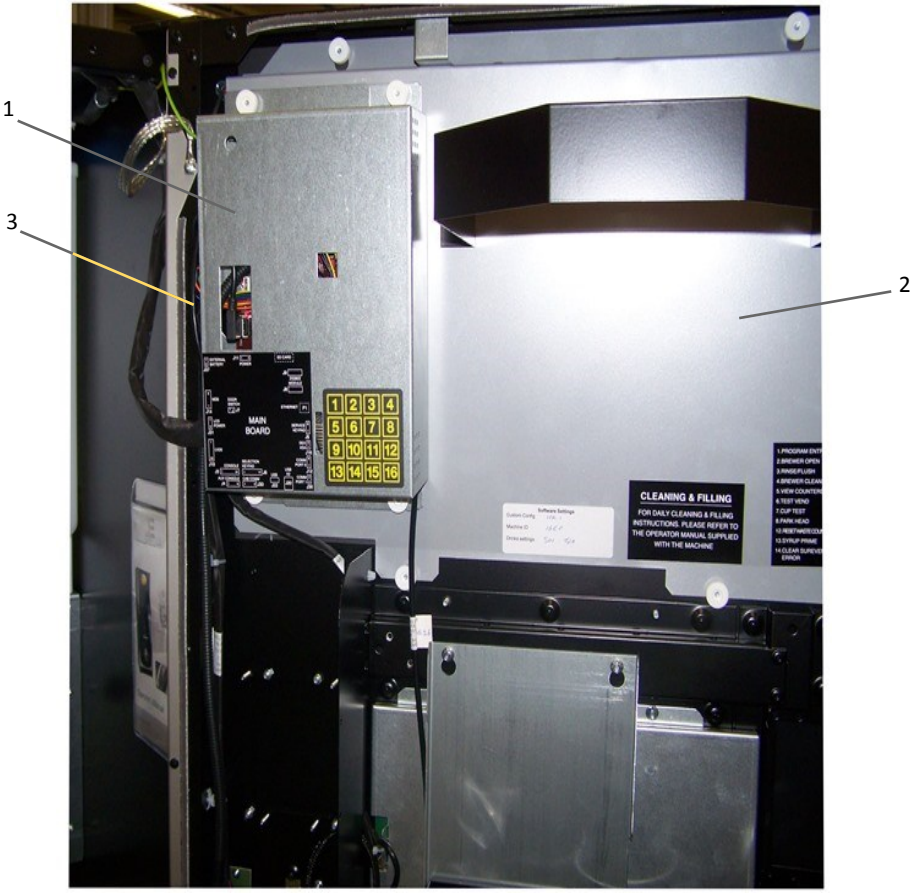

Inner Door Upper - After S/N 2528-126361

Ref No.	Part No.	Item Description
1	a) MT15089000	ATLAS G BOARD MOUNTING PLATE
	b) MT15090000	ATLAS G BOARD COVER
	c)EL13158002	CONTROL PCB (not shown)
2	MT13797251	LED MOUNTING BRACKET
3	LO15067000	DOOR LOOM
	LO15066000	LVDS TO DISPLAY LOOM (not shown) (replaces LO13364000)
	MT15165000	DISPLAY MONTING BRACKET (not shown)
	LO15068000	ATM LOOM (not shown)
	LO15072000	JUMPER LOOM (not shown)

Inner Door Lower

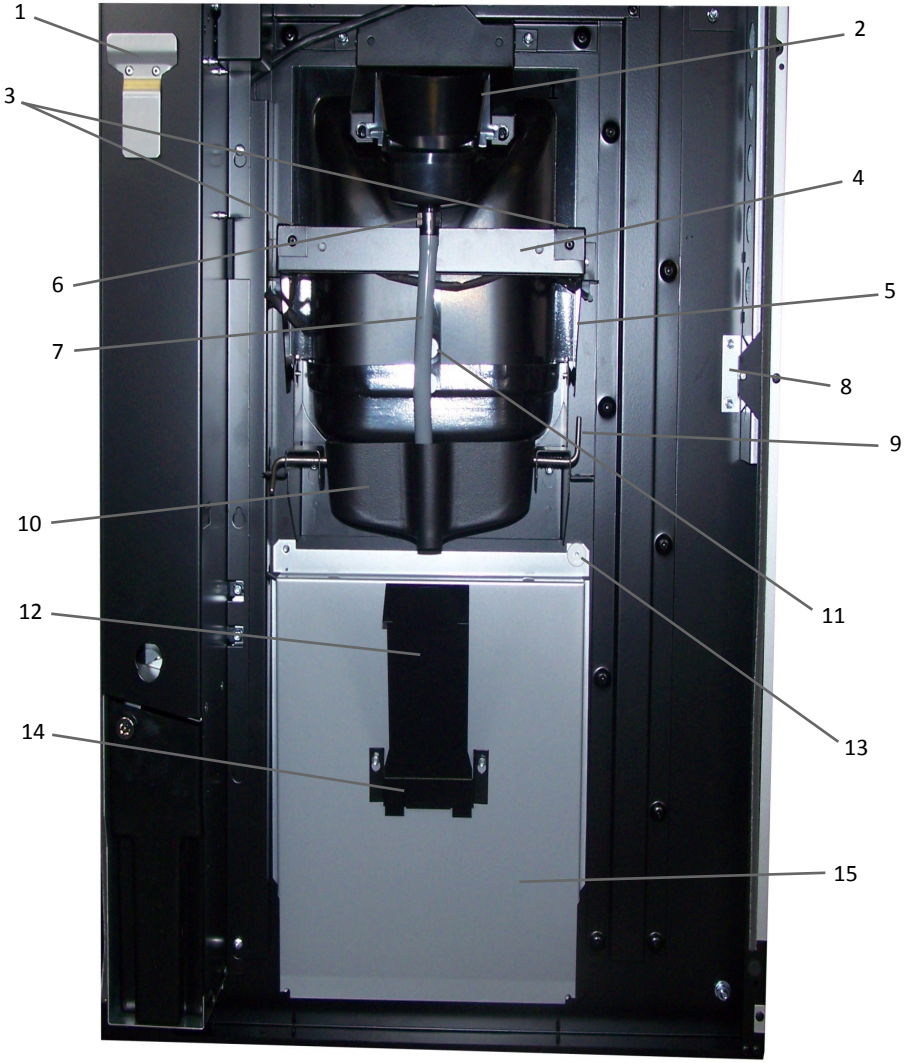

Inner Door Lower Parts List

Ref No.	Part No.	Item Description
1	MT13081000	CANISTER SUPPORT BRACKET
2	a) PL13126000	CUP CATCHER 73MM (squat)
	b) PL13125000	CUP CATCHER 70MM (tall)
	c) PL13128000	CUP CATCHER 80MM
3	a) EL13152000	CUP SENSOR PCB (pair)
	b) PL13134000	CUP SENSOR LENS (singular)
4	MT13790290	VEND AREA RETAINER
5	MT13796290	DRIP TRAY MOUNTING BRACKET
6	PL13147000	CUP CATCHER CLIP
7	SI01142960	12MM SILICONE PIPE
8	MT13806000	LOCKBAR BRACKET
9	a) ME04926001	SPRING PIN
	b) ME01162000	SPRING
	c) FA01136000	5MM E CLIP
10	PL13802000	DRIP TRAY
11	FA04301000	M4 THUMB NUT
12	MT14064290	DRIP CATCHER ARM
13	FA01416000	M5 NYLON THUMB NUT
14	MT14065290	DRIP CATCHER PIVOT BRKT
15	MT14751250	LED MOUNTING BRACKET

Payment System View

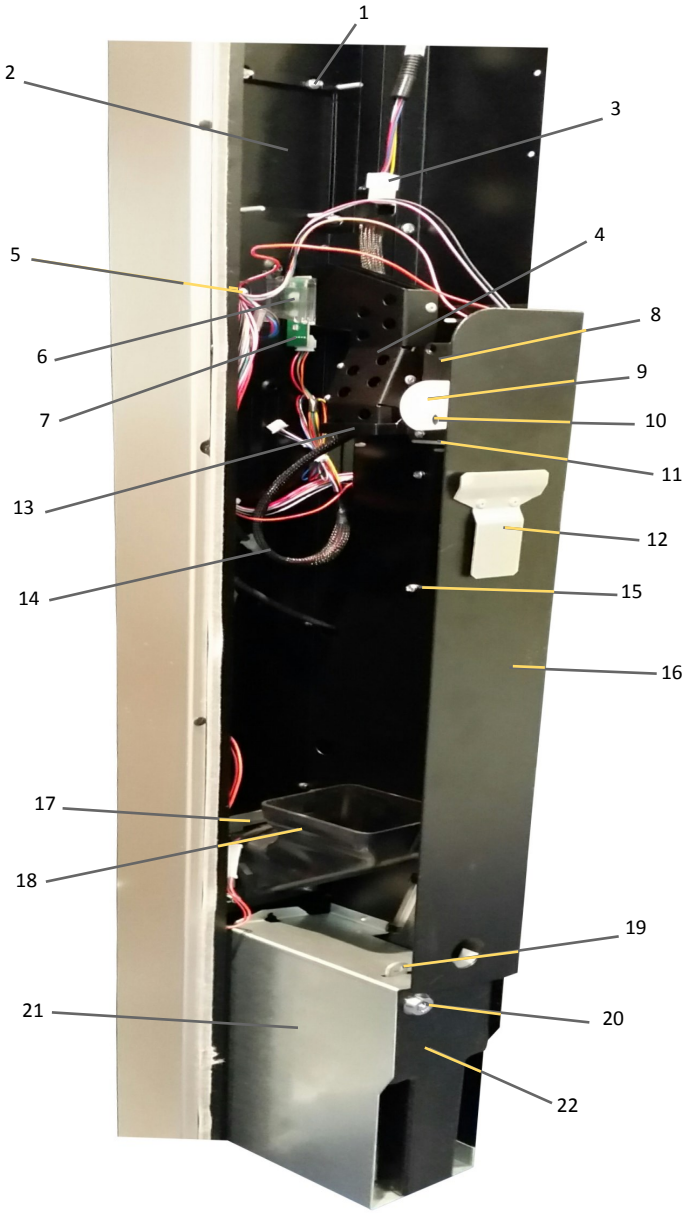

Payment System Parts List

Ref No.	Part No.	Item Description
1	FA01508000	M5 HEX FULL NUT
2	MT14795290	FREE VEND PLATE
3	C9989706	MDB HARNESS
4	a) MT14968290	COIN CHUTE BASE
	b) MT14967290	COIN CHUTE COVER
	c) MT14969290	COIN CHUTE MOUNTING BRACKET (not shown)
5	EL13156000	IRDA PCB (infra red)
6	CR0012773	COIN INSERT CHUTE
7	CR0014123	LED PCB ASSEMBLY
8	a) C1477112	COIN REJECT MOTOR
	b) MT13087290	COIN REJECT MOTOR COVER (not shown)
9	C1815028	COIN RETURN CAM
10	C4407712	MOTOR COUPLING
11	MT13090000	REJECT MOTOR MOUNTING BRACKET
12	MT13081000	CANISTER SUPPORT BRACKET
13	MT14489290	COIN CHUTE SHROUD ASSEMBLY
14	CR0015428	LED HARNESS
15	FA10807000	M4x10 TAPTITE PIZIPAN SCREW
16	MT15092290	MONETARY PANEL
17	MT13792000	COIN RETURN MOUNTING BRACKET
18	a) PL13139000	COIN RETURN CHUTE L/H
	b) PL13138000	COIN RETURN CHUTE R/H
19	MT06635000	LOCK CAM
20	a) ME01859000	CASHBOX LOCK C/W 2 Keys
	b) ME03333000	CASHBOX KEY (key number 300245)
21	MT13088000	CASHBOX MOUNTING BRACKET
22	C1671090	CASHBOX

Payment System Assemblies and Plates

Note: Below kits are exclusive of payment devices but inclusive of all other parts required to change machines from free vend to the required payment system.

Ref No.	Item Description	Mounting Plate Only
VM WFM	Coin Mech Kit	
VMP VMC WFM	VMC + MDB Coin Mech Kit	MT14806290
VMP MIZIP KW	MIZIP KEY + MDB Coin Mech Kit	MT14800290
VMP G2 WFM	G2 + MDB Coin Mech Kit	MT14798290
VMP BILLV WFM	Bill Validator + MDB Coin Mech Kit	MT14796290
VMP NAYAX WFM	NAYAX + MDB Coin Mech Kit	MT14856290
VMP MEI 4 1 WFM	MEI 4 IN 1 + MDB Coin Meck Kit	MT14769290
VMP MEIE WFM	MEI E-PAY + MDB Coin Mech Kit	MT14934290

Page intentionally left blank

Cup Drop Assembly

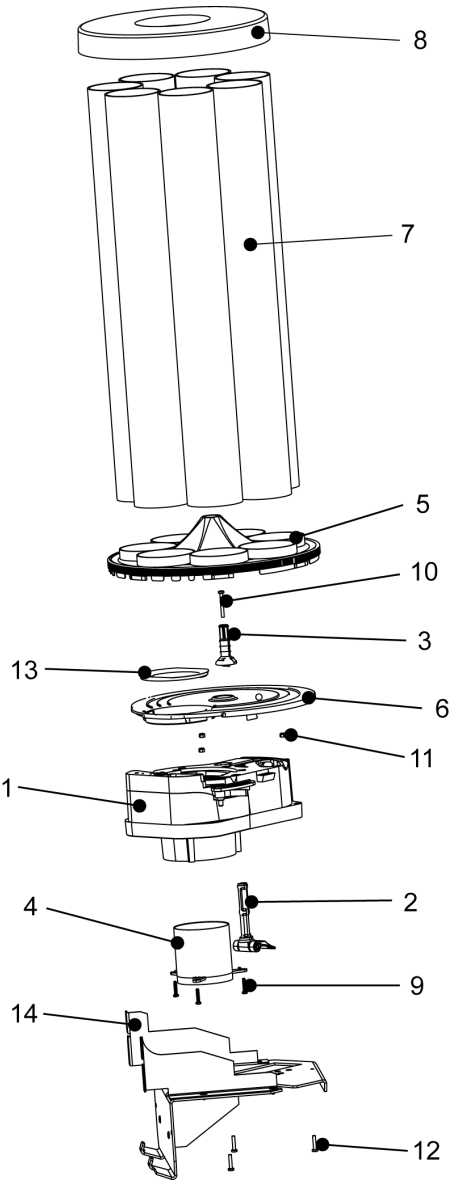

Cup Drop Assembly Parts List

Ref No.	Part No.	Item Description
1	ME14045000	CDU ASSEMBLY
2	ME14046000	ADJUSTMENT PIN ASSEMBLY
3	PL13692000	CAROUSEL PIN TOP
4	PL13843000	CUP THROAT
5	(a) PL13703000	7 STACK CAROUSEL (70/73mm cup)
	(b) PL13836000	6 STACK CAROUSEL (80mm cup)
6	PL13702000	CAROUSEL PLATE
7	(a) PL13840000	TURRET TUBE (70/73mm cup)
	(b) PL13842000	TURRET TUBE (80mm cup)
8	(a) PL13839000	7 STACK TURRET LID
	(b) PL13841000	6 STACK TURRET LID
9	PL01973000	M4X20 PAN HEAD SCREW
10	FA11188000	M4X35 PAN HEAD SCREW
11	FA03262000	M4 NYLOC NUT
12	FA14699000	M4X25 TAPTITE PAN HEAD SCREW
13	(a) PL14475000	CUP REDUCING RING (70/73mm cup)
	(b) PL14476000	CUP REDUCING RING (80mm cup)
14	MT13871290	CDU MOUNTING BRACKET
	ME14693000	CDU SETTING RING (not shown

Single Fresh Brew View

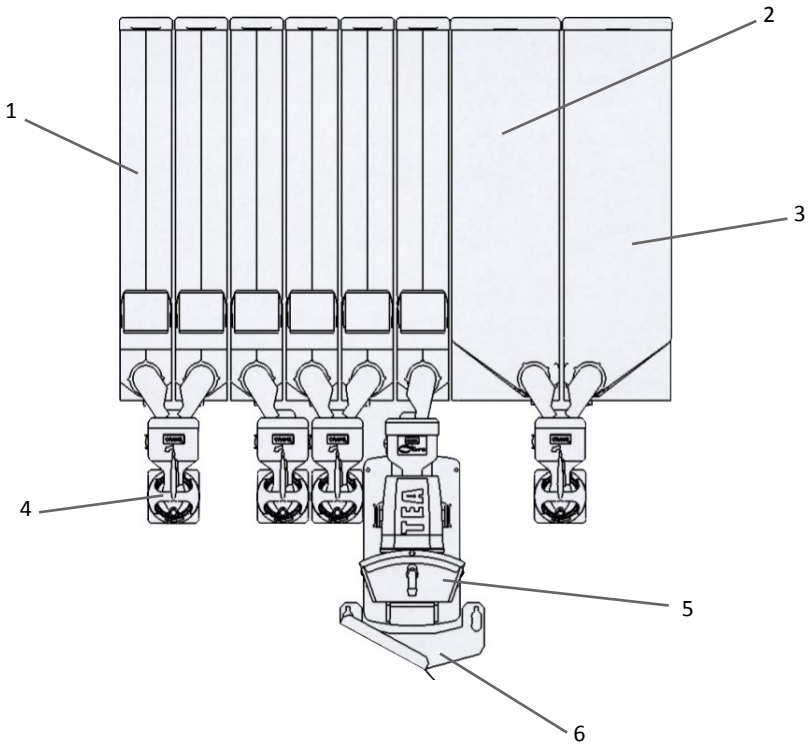

Single Fresh Brew Parts List

Ref No.	Part No.	Item Description
1	INSTANT CANISTER ASSY	see page 29
2	PL13717000 (SEE PAGE 31)	FRESH BREW CANISTER ASSY R/H
3	PL10821000 (SEE PAGE 31)	FRESH BREW CANISTER ASSY
4	SEE PAGE 37	MIXING SYSTEM
5	SEE PAGE 41	OLTRE BREWER
6	MT13740000	L/H WASTE CHUTE
	MO10152001	INGREDIENT MOTOR 24V DC 130RPM (not shown)
	PL13023000	INGREDIENT MOTOR SPIGOT (not shown)

Triple Fresh Brew View

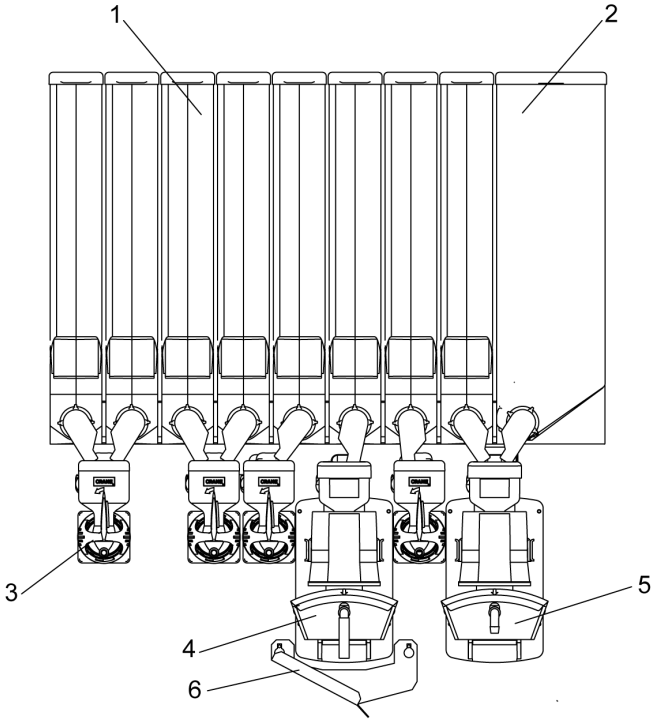

Triple Fresh Brew View Parts List

Ref No.	Part No.	Item Description
1	INSTANT CANISTER ASSY	see page 29
2	FRESH BREW CANISTER ASSY	see page 31
3	MIXING SYSTEM	see page 37
4	TEA OLTRE BREWER	see page 41
5	COFFEE OLTRE BREWER	see page 41
6	MT13740000	L/H WASTE CHUTE
	MT14400000	R/H WASTE CHUTE (not shown)
	MO10152001	INGREDIENT MOTOR 24V DC 130RPM (not shown)
	PL13023000	INGREDIENT MOTOR SPIGOT (not shown)

Espresso View

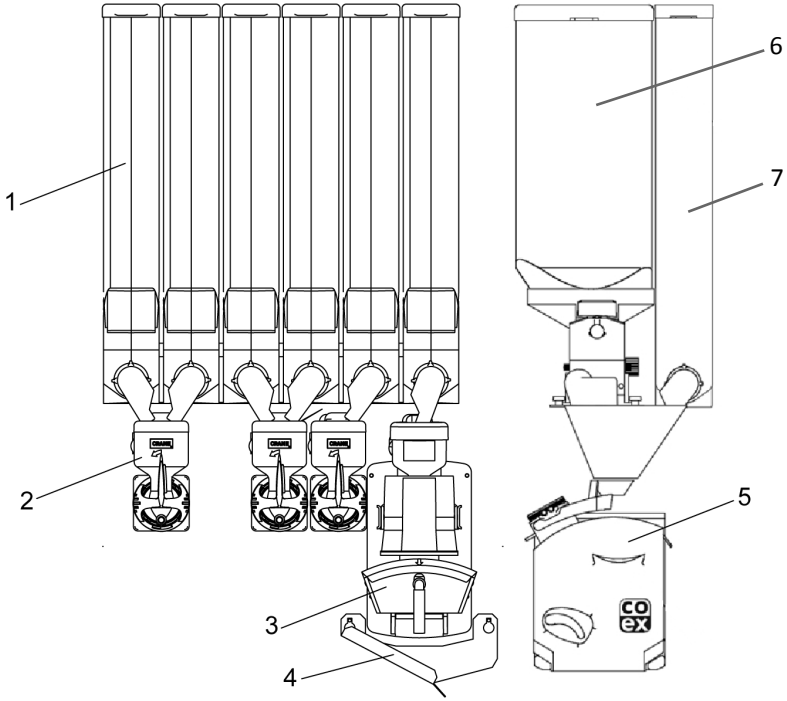

Espresso View Parts List

Ref No.	Part No.	Item Description
1	INSTANT CANISTER ASSY	see page 29
2	MIXING SYSTEM	see page 37
3	OLTRE BREWER	see page 41
4	MT13740000	L/H WASTE CHUTE
5	CO-EX BREWER ASSY	see page 43
6	BEAN CANISTER	See page 47
7	FRESH BREW CANISTER	See page 47
	MO10152001	INGREDIENT MOTOR 24V DC 130RPM (not shown)
	PL13023000	INGREDIENT MOTOR SPIGOT (not shown)

Canister Assembly

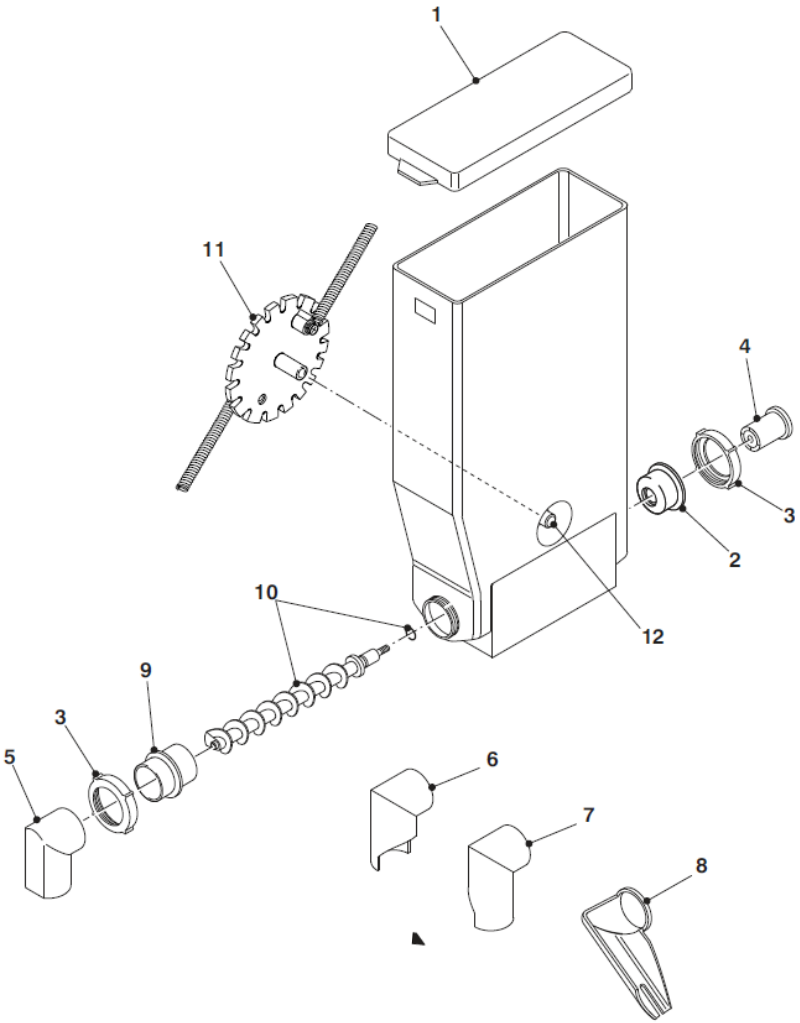

Canister Assembly Parts List

Ref No.	Part No.	Item Description
	PL11170000	67MM WIDE CANISTER C/W AGITATOR FRESH BREW/ INSTANT PLASTIC AUGER
	PL11608000	67MM WIDE CANISTER NO AGITATOR FRESH BREW/ INSTANT WIRE AUGER
	PL11172000	67MM WIDE CANISTER C/W AGITATOR STAILESS STEEL AUGER
	PL12081000	67MM WIDE CANISTER C/W AGITATOR WIRE AUGER
	PL11880000	137MM WIDE CANISTER C/W AGITATOR AND STAINLESS STEEL AUGER—FRESH BREW
	PL11881000	42MM WIDE CANISTER C/W AGITATOR TEA/FRESHBREW
1	PL11179000	67MM WIDE CANISTER LID
2	PL10358000	REAR FLANGE
3	PL10356000	END CAP
4	PL02711000	CANISTER DRIVE
5	PL01128000	VENTRAL CANISTER CHUTE
6	PL01441000	L/H CANISTER CHUTE LONG
7	PL01442000	R/H CANISTER CHUTE LONG
8	PL10297001	TEA CANISTER EXTENDED CHUTE
9	a. PL10357000	FRONT FLANGE
	b. PL14177000	HALF MOON FRONT FLANGE
10	(a) ME02706000	PLASTIC AUGER C/W O RING
	(b) SI02705000	O RING
11	PL02707000	AGITATOR WHEEL
12	PL11696000	CANISTER BUNG

Fresh brew Canister Assembly

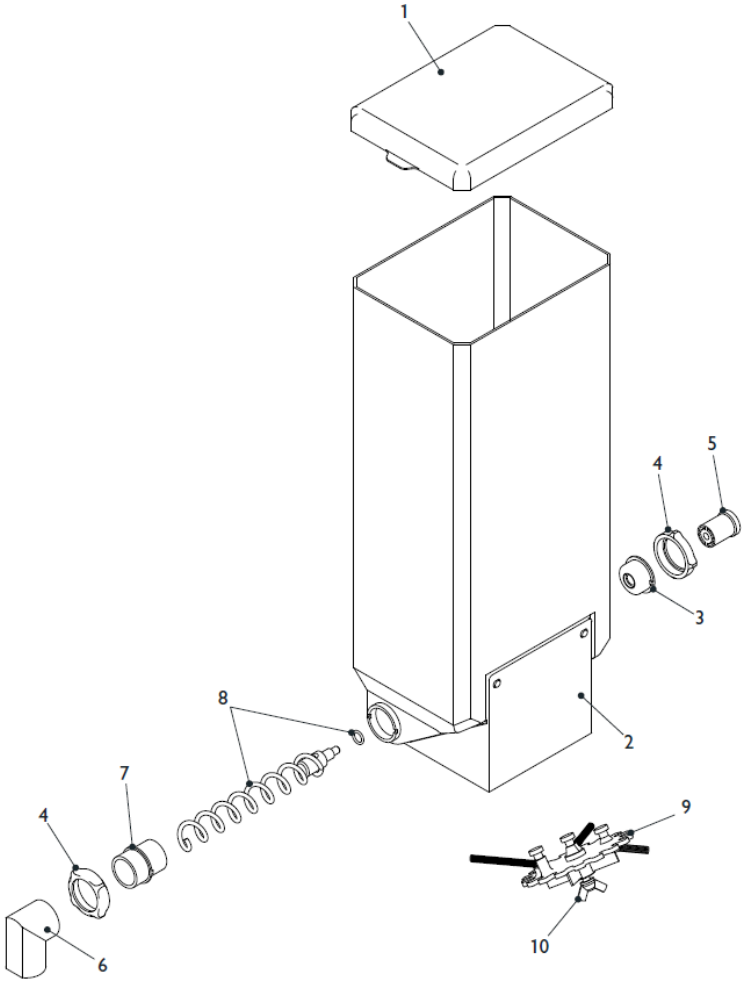

Fresh Brew Canister Parts List

Ref No.	Part No.	Item Description
	PL10821000	137MM WIDE FRESH BREW TEA CANISTER PLASTIC AUGER
	PL13717000	137MM WIDE CANISTER, R/H OUTLET C/W AUGER AND AGITATOR
	PL14515000	137MM FRESH BREW COFFEE C/W ST/STL AUGER
	PL13971000	67MM WIDE FRESH BREW COFFEE CANISTER C/W ST/STL SOLID AUGER AND AGITATOR
	PL01923000	160MM FRESH BREW COFFEE CANISTER C/W ST/ STL AUGER AND WIRE WHIP
1	PL11180000	CANISTER LID
2	PL11181000	CANISTER BASE
3	PL10358000	REAR FLANGE
4	PL10356000	CANISTER FLANGE NUT
5	PL02711000	CANISTER DRIVE
6	PL01128000	CENTRAL CANISTER CHUTE
7	PL10357000	FRONT FLANGE
8	ME10386000	PLATIC AUGER C/W O RING
	SI02705000	O RING
9	PL11182000	AGITATOR ASSEMBLY
10	PL11183000	AGITATOR FIXING NUT

Power Supply Assembly

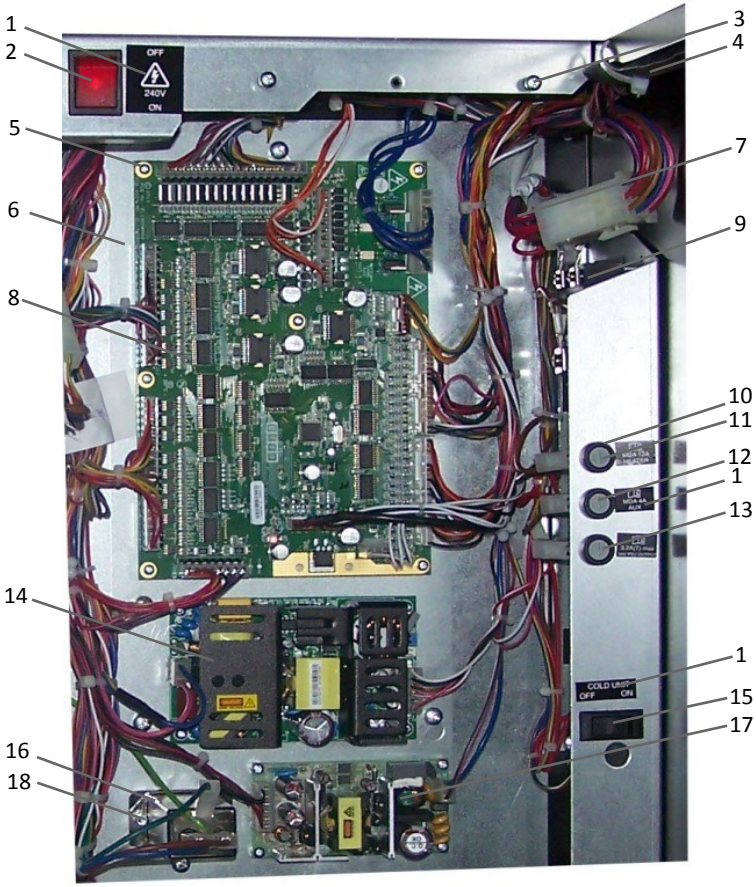

Power Supply Assembly Parts List

Ref No.	Part No.	Item Description
1	PR1333000	PART OF MACHINE DECAL SHEET
2	EL13317000	ROCKER SWITCH
3	FA10807000	M4X10 POZIPAN SCREW
4	LO13108001	MAIN LOOM
5	FA01498000	M3X6 POZI PAN REC SCREW
6	MT13077000	I/O CIRCUIT BOARD PLATE
7	a) LO13653001	PSU LOOM INSTANT/FRESH BREW
	b) LO13654001	PSU LOOM B2C
8	EL13059001	I/O BOARD
9	EL01152002	SOLID STATE RELAY
10	EL01994000	FUSE HOLDER ASSY
11	EL01995000	12 AMP FUSE (heater)
12	EL01277000	4 AMP ANTI SURGE FUSE (aux)
13	EL14845000	3.2 AMP SLO-BLOW FUSE (psu)
14	EL14585000	SWITCH MODE 24VDC POWER SUPPLY
15	EL01146000	ON/OFF SWITCH (used when cold unit fitted)
16	EL13175000	IEC MAINS FILTER
17	EL13165000	SWITCH MODE 12VDC POWER SUPPLY
18	FA11774000	M3 SELF LOCKING NYLOC NUT

Dispense Head Assembly

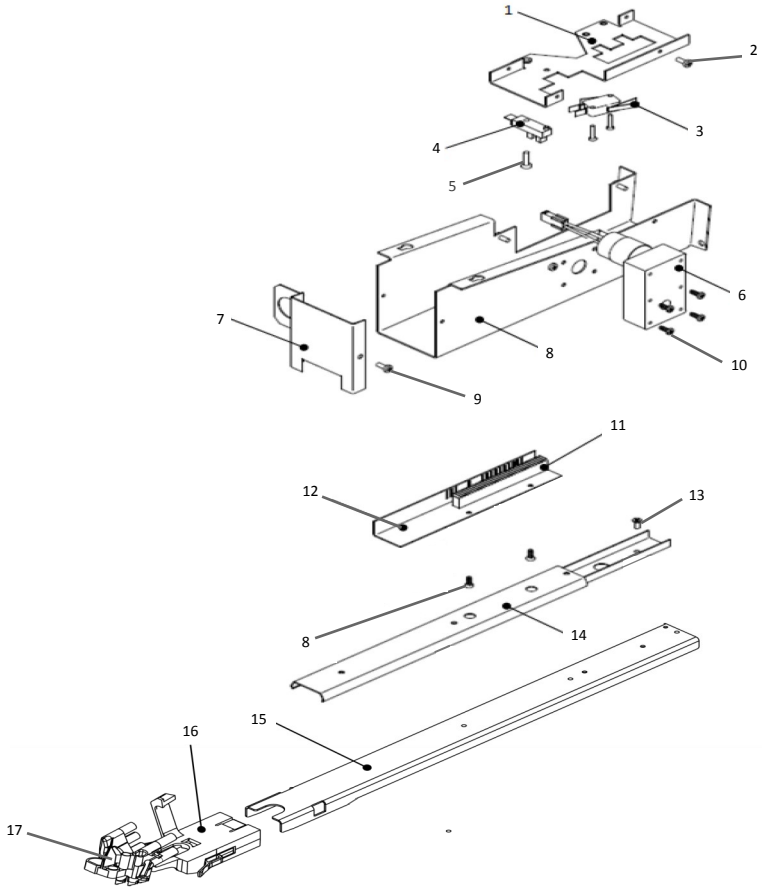

Dry Sugar Dispense Head

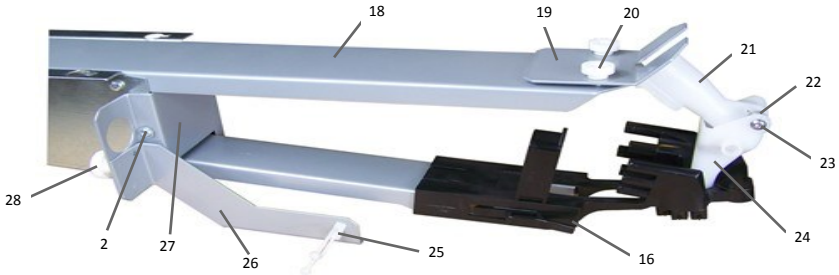

Dispense Head Assembly Parts List

Ref No.	Part No.	Item Description
	VO DISP HEAD	COMPLEAT DISPENSE HEAD ASSEMBLY
1	MT10695000	DISPENSE HEAD CHANNEL
2	FA10807000	M4X10 TAPTITE POZIPAN SCREW
3	a) EL04920000	MICRO SWITCH
	b) MT13572000	MICRO SWITCH BRACKET (not shown)
	c) FA10203000	M3 NYLOC NUT (not shown)
4	EL10036000	OPTO SENSOR
5	FA12046000	M4X16 TAPTITE POZIPAN SCREW
6	MO10794001	MOTOR 24VDC 50RPM
7	MT10696080	DISPENSE HEAD FRONT COVER
8	MT10694000	DISPENSE HEAD BODY
9	FA04451000	M4X10 FLANGE SCREW
10	FA07683000	M4X10 THERMOPLASTIC SCREW
11	PL10035000	DISPENSE HEAD RACK MOULDING
12	MT10697000	DISPENSE HEAD CODE ANGLE
13	FA04339000	M4X10 POZI CSK SCREW
14	MT13826250	DISPENSE HEAD ARM
15	ME04063001	DISPENSE HEAD SLIDE
16	PL15289000	MOULDED DISPENSE HEAD
17	PH05501000	NOZZLE SET
18	MT13828250	DRY SUGAR DISPENSE ARM
19	MT14619250	DRY SUGAR CLAMP PLATE
20	FA04301000	M4 THUMB NUT
21	PL13349000	DRY SUGAR SPOUT FIXED
22	ME08502000	TORSION SPRING
23	FAO7950000	M4X16 BUTTON HEAD SCREW
24	PL13348000	DRY SUGAR SPOUT HEAD
25	FA13683000	TWIST LOCK WITH BACKPLATE
26	MT14490340	WASTE LEVEL PROBE BRACKET
27	MT13829250	DRY SUGAR DISPENSE HEAD FRONT COVER
28	FA01416000	M5 NYLOC THUMB NUT
	LO11751000	DISPENSE HEAD LOOM (not shown)
	LO14635000	MOTOR LINK 100nF CAP (not shown)

Mixing System

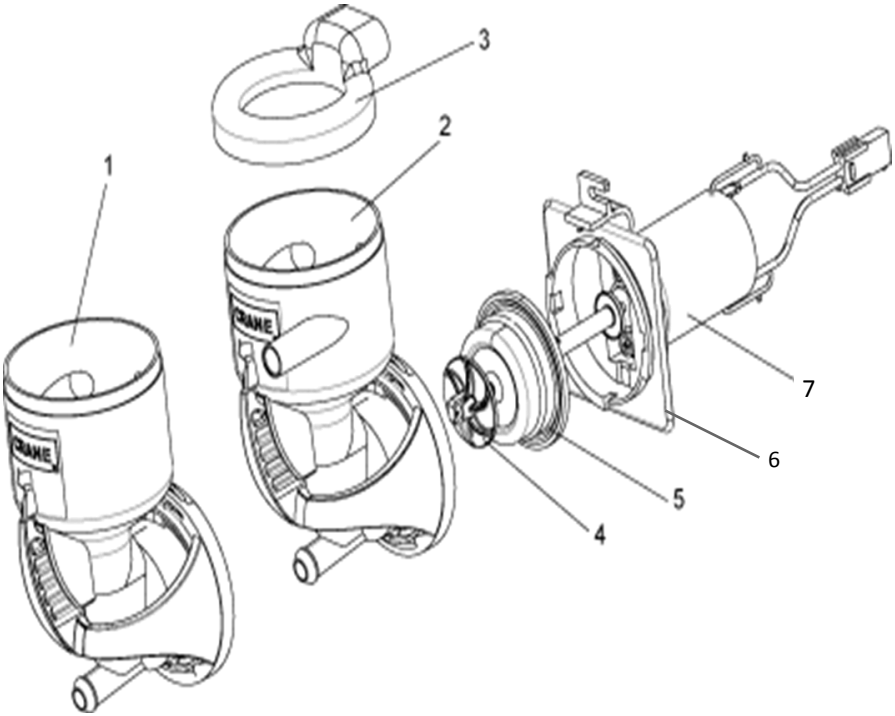

Mixing System Parts List

Ref No.	Part No.	Item Description
1	ME14043000	SINGLE INLET WHIPPER BOWL
2	ME14044000	DUAL INLET WHIPPER BOWL
3	PL13725000	STEAM TRAP
4	PL13723000	IMPELLER
5	PL13728000	WHIPPER BOWL SEAL
6	PL10802000	WIPPER MOUNTING PLATE
7	ME13729000	WHIPPER MOTOR C/W MOUNTING PLATE
	ME14548000	BOWL ADPTOR (not shown)
	C6927009	OUTLET FLOW RESTRICTOR, WHITE (not shown)

Hygiene Kits

Part No.	Item Description
VCH HYG B2C	B2C HYGIENE KIT
VCH HYG B2C FBT	B2C PLUS FRESH BREW TEA HYGIENE KIT
VCH HYG DFB	DOUBLE FRESH BREW HYGIENE KIT
VCH HYG INSTANT	INSTANT HYGIENE KIT
VCH HYG SFBC	SINGLE FRESH BREW COFFEE HYGIENE KIT
VCH HYG SFBT	SINGLE FRESH BREW TEA HYGIENE KIT
VCH HYG SUGAR	DRY SUGAR HYGIENE KIT

Heater Tank Assembly

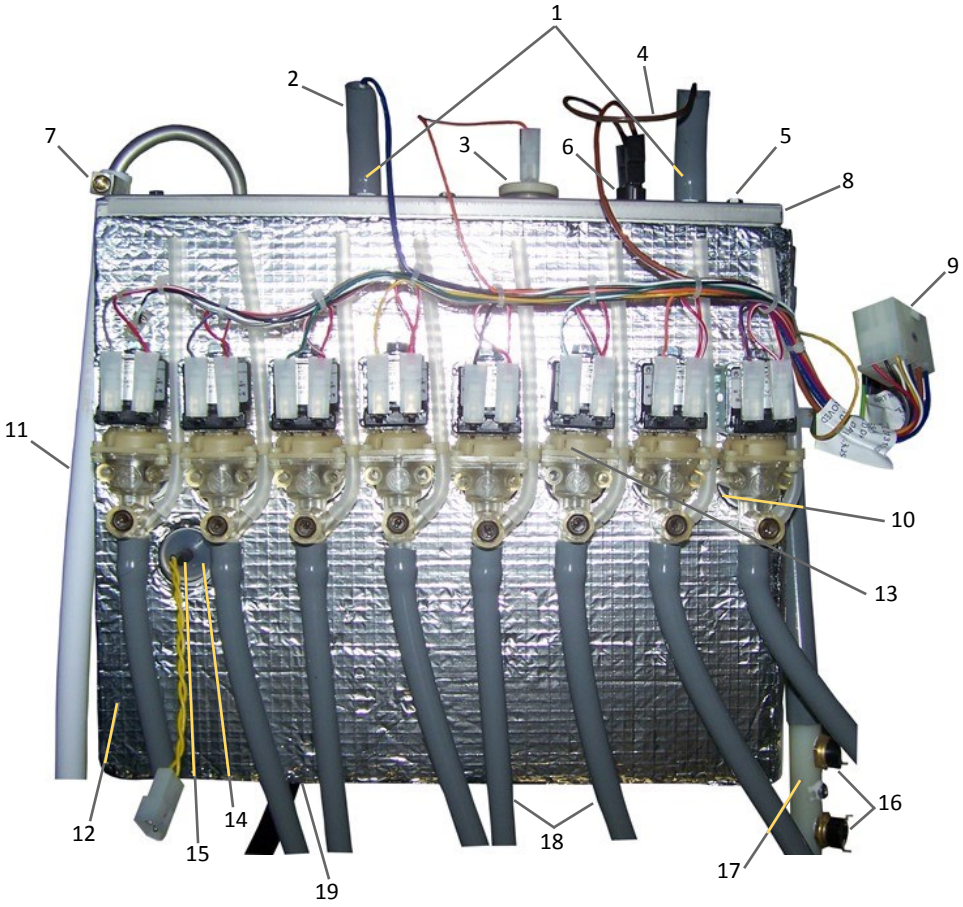

Heater Tank Assembly Parts List

Ref No.	Part No.	Item Description
	BA15268000	8 PORT BOILER AND LID ASSEMBLY
1	EL11994000	ELEMENT 240V 2.35kW
2	SI01142960	12MM SILICONE PIPE
3	ME04550000	LEVEL PROBE ASSY
4	EL14247000	LINK LOOM
5	FA01143000	M4 X 10MM STAINLESS SET SCREW
6	EL10954000	THERMAL CUTOUT
7	FA03227000	UNEX CLIP
8	SI10627960	HEATER LID SEAL
9	LO13106000	BOILER LOOM
10	a) VA03377002	MULLER VALVE PORT SEAL
	b) SI08276000	PORT SEAL BLANK (not shown)
11	HO06632000	HYDRAVEND PIPE
12	BA14364000	HEATER TANK INSULATION
13	a) VA10148002	MULLER 24V DISPENSE VALVE
	b) VA01838A00	MULLER DISPENSE VALVE REPAIR KIT (not
14	SI06340000	THERMISTOR PORT SEAL
15	EL03112000	THERMISTOR PROBE
16	EL03378000	HIGH TEMPERATURE CUT OUT
17	ME03024001	HIGH TEMERATURE CUT OUT HOLDER
18	SI01171960	8MM SILICONE PIPE
19	FA01185000	SNAPPER CLIP (not shown)
	PL00718000	DRAIN PIPE BUNG (not shown)

Oltre Brewer

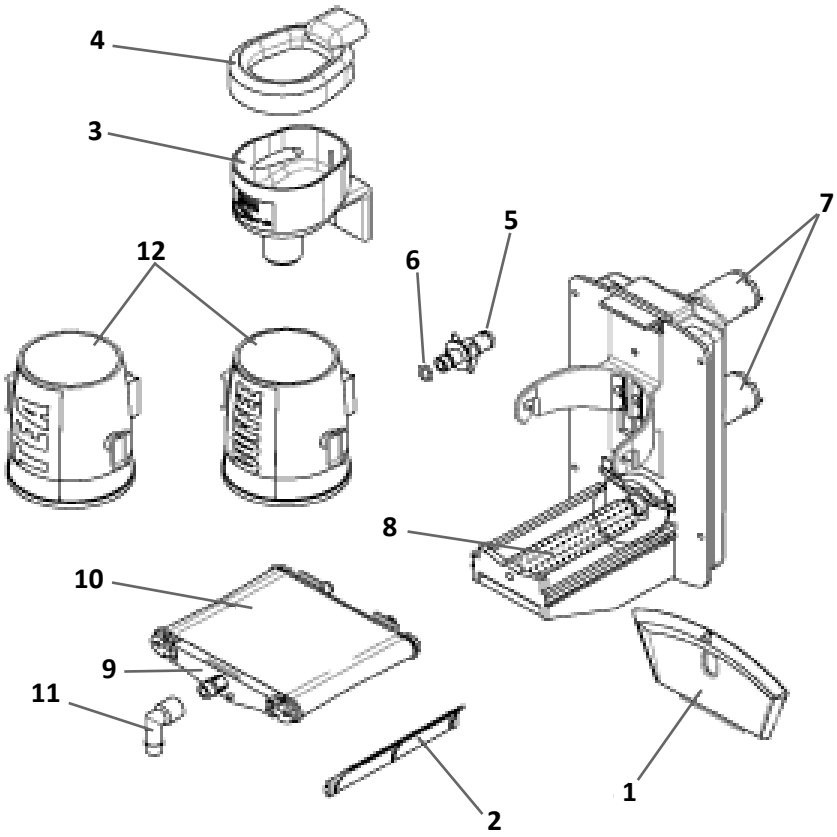

Oltre Brewer Parts List

Ref No.	Part No.	Item Description
	ME13412001	COFFEE BREWER ASSY 73MM COMPLETE
	ME13414001	COFFEE BREWER ASSY 83MM COMPLETE
	ME13413001	TEA BREWER ASSY 73MM COMPLETE
1	PL13451000	RELEASE HANDLE
2	PL13450000	CLEARING RIBBON
3	PL13455000	MIXING BOWL
4	PL13454000	STEAM TRAP
5	PL13456000	BOWL ADAPTOR
6	ME13438000	O-RING
7	MO13457000	MOTOR 30 RPM
8	ME15106000	DRIVE ROLLER KIT
9	(a) ME13463001	COFFEE CARRIAGE ASSY 83MM
	(b) ME13465001	COFFEE CARRIAGE ASSY 73M
	(c) ME13466001	TEA CARRIAGE ASSY 73MM
10	(a) ME13480000	COFFEE FILTER BELT
	(b) ME13479000	TEA FILTER BELT
11	(a) PL13478000	COFFEE OUTLET SPOUT (YELLOW)
	(b) PL13477000	TEA OUTLET SPOUT (BLUE)
12	(a) PL13474000	COFFEE CHAMBER ASSY 73MM
	(b) PL13469000	COFFEE CHAMBER ASSY 83MM
	(c) PL13532000	TEA CHAMBER ASSY 73MM
	MT14400000	WASTE CHUTE R/H (not shown)
	MT13740000	WASTE CHUTE L/H (not shown)
	ME13592001	PERISTALTIC PUMP 24V DC (not show)
	PA13650000	PERISTALTIC PUMP TUBE ASSY (not shown)
	LO13296000	BREWER MAIN LOOM (not shown)
	LO14635000	MOTOR SUPRESSION LOOM (not shown)

Co-Ex Brewer

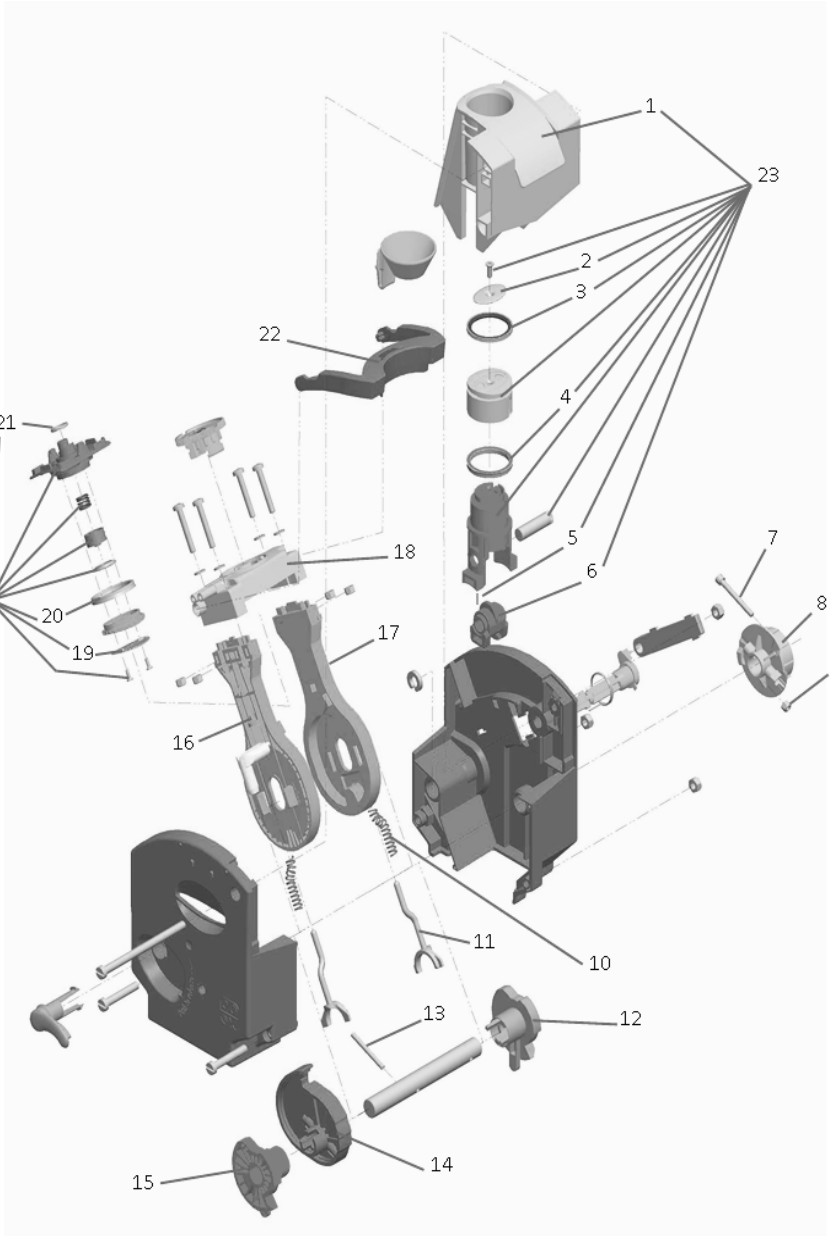

Co-Ex Brewer Parts List

Ref No.	Part No.	Item Description
	PH10190000	CO-EX BREWER C/W FILTER HEAD
1	PL10588000	CYLINDER
2	ME10589000	LOWER PISTON FILTER SCREEN
3	ME10590000	LOWER PISTON SCRPERING
4	ME10591000	LOWER PISTON U CUP RING
5	FA13247000	ROLL PIN
6	PL13248000	SLIDE BLOCK
7	FA12073000	M4X40MM CAP HEAD SCREW
8	PL13257000	BREWER MOTOR COUPLING
9	FA11775000	M4 NYLOCK NUT
10	ME13249000	PRESSURE SPRING
11	PL13250000	SPRING HOLDER
12	PL13251000	BACKSIDE CURVE CAM
13	FA13252000	4MMX40MM ROLL PIN
14	PL13253000	PISTON CURVE CAM
15	PL13254000	FRONT SIDE CURVE CAM
16	PL13255000	FRONT SWING ARM
17	PL13256000	REAR SWING ARM
18	PL13226000	BREWER HEAD
19	ME10593000	FILTER SCREEN
20	ME10594000	UPPER U CUP RING
21	ME10596000	FILTER PLATE QUADRING
22	PL11622000	WIPER ARM
23	ME10592000	LOWER PISTON ASSEMBLY
24	a. ME10284000	FILTER HEAD (non espresso)
	b. ME14627000	FILTER HEAD (espresso)
25	MO11679001	BREWER MOTOR 24VDC
26	ME10597000	DRIVE WHEEL
27	a) EL10903000	MICRO SWITCH
	b) EL10587000	MICROSWITCH LEVER
28	MT10978000	BREWER MOTOR MOUNTING BRKT
29	ME10763000	WATER INLET C/W O RING
30	ME10595000	WATER INLET O RING
31	ME10762000	BREWER MOUNTING BRKT
32	PL13226000	BREWER HEAD
33	PL10283000	COFFEE OUTLET SPOUT

Co-Ex Brewer Continued

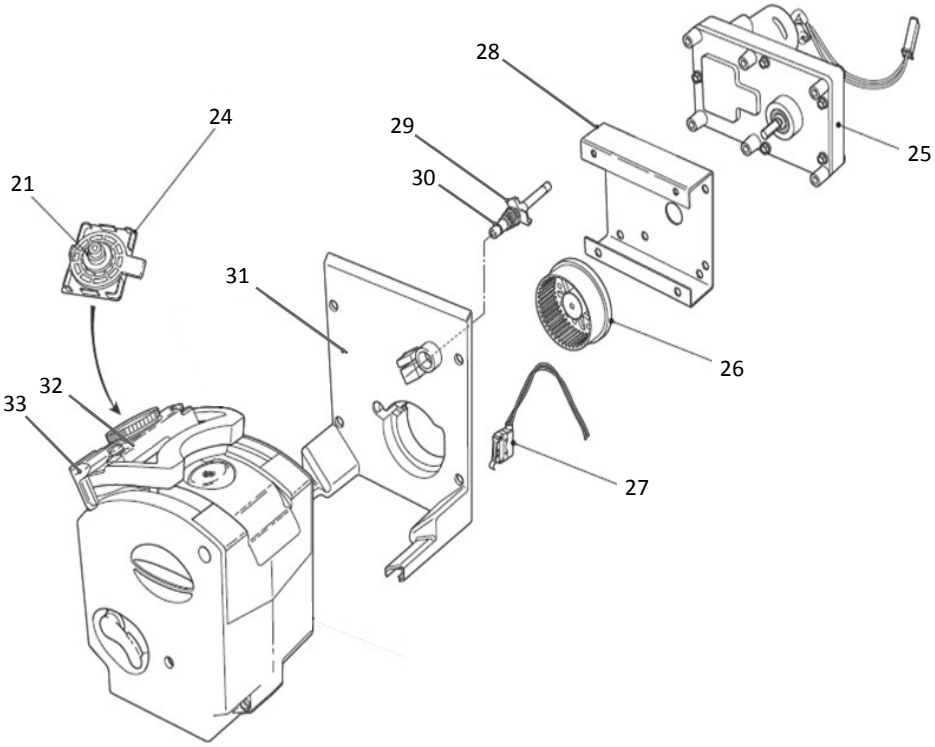

Co-Ex Brewer Parts List Continued

21	ME10596000	FILTER PLATE QUADRING
22	PL11622000	WIPER ARM
23	ME10592000	LOWER PISTON ASSEMBLY
24	ME10284000	FILTER HEAD ASSEMBLY
25	MO11679001	BREWER MOTOR 24VDC
26	ME10597000	DRIVE WHEEL
27	a) EL10903000	MICRO SWITCH
	b) EL10587000	MICROSWITCH LEVER
28	MT10978000	BREWER MOTOR MOUNTING BRKT
29	ME10763000	WATER INLET C/W O RING
30	ME10595000	WATER INLET O RING
31	ME10762000	BREWER MOUNTING BRKT
32	PL13226000	BREWER HEAD
33	PL10283000	COFFEE OUTLET SPOUT
	ZC10598000	CLEANING TABLETS (pack of 30) (not shown)

Co-Ex Module Assembly

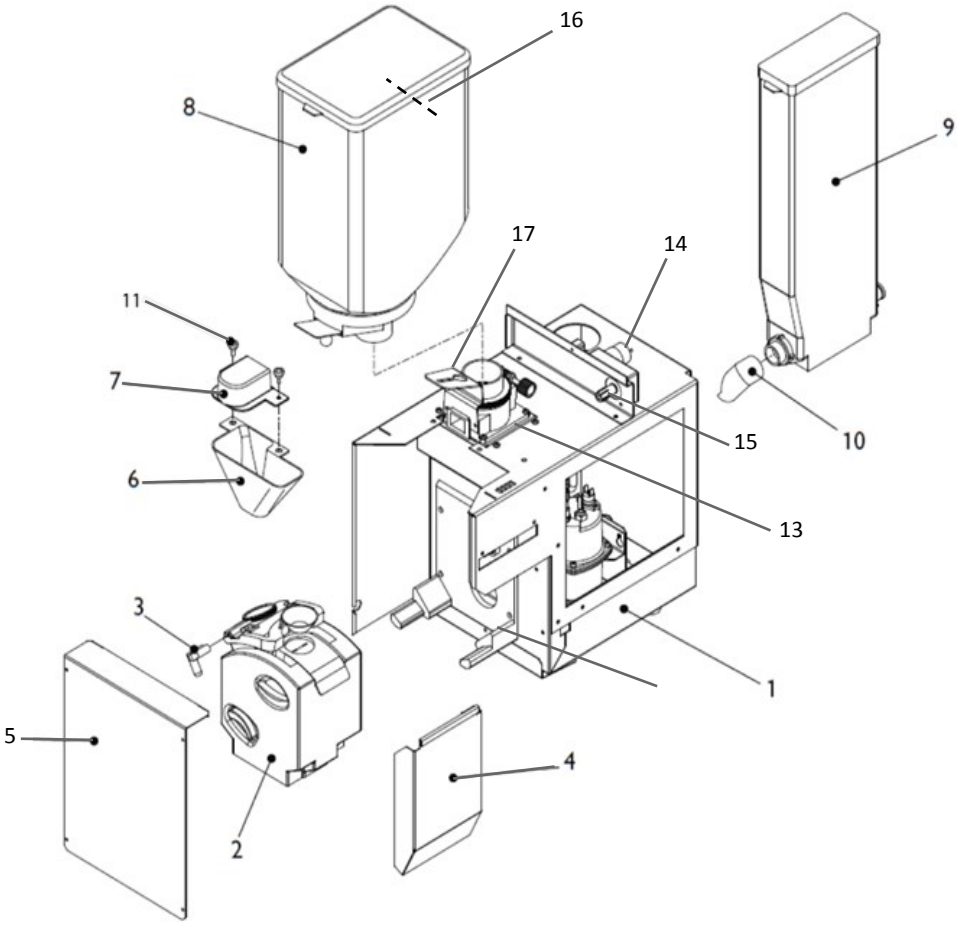

Co-Ex Module Assembly Parts List

Ref No.	Part No.	Item Description
1	ESPRESSO MUDULE	SEE PAGE 49
2	CO-EX BREWER	SEE PAGE 45
3	PL10283000	CO-EX BREWER SPOUT
4	MT13323000	LONG SIDE TRAY
5	MT10847000	BREWER COVER
6	PL10580000	GRINDER CHUTE
7	PL10282000	GRINDER CHUTE COVER
8	PL10792000	BEAN CANISTER C/W LID
9	PL13971000	FRESH BREW CANISTER
10	PL01442000	FRESH BREW CANISTER CHUTE
11	FA07111000	M4X10MM THUMBSCREW
12	MT11655000	DRAIN COVER
13	MT10966000	GRINDER MOUNTING BRACKET
14	MO10152001	INGREDIENT MOTOR 24VDC 130RPM
15	PL13023000	INGREDIENT MOTOR SPIGOT
16	a) MT11252000	BEAN CANISTER SUPPORT RAIL
	b) FA02431000	M4X8MM POZI PAN ST/STL SCREW
	c) FA02154000	M4 ST/STL FULL NUT
17	MT10808290	CANISTER STOP/SUPPORT

Co-Ex Module Assembly continued

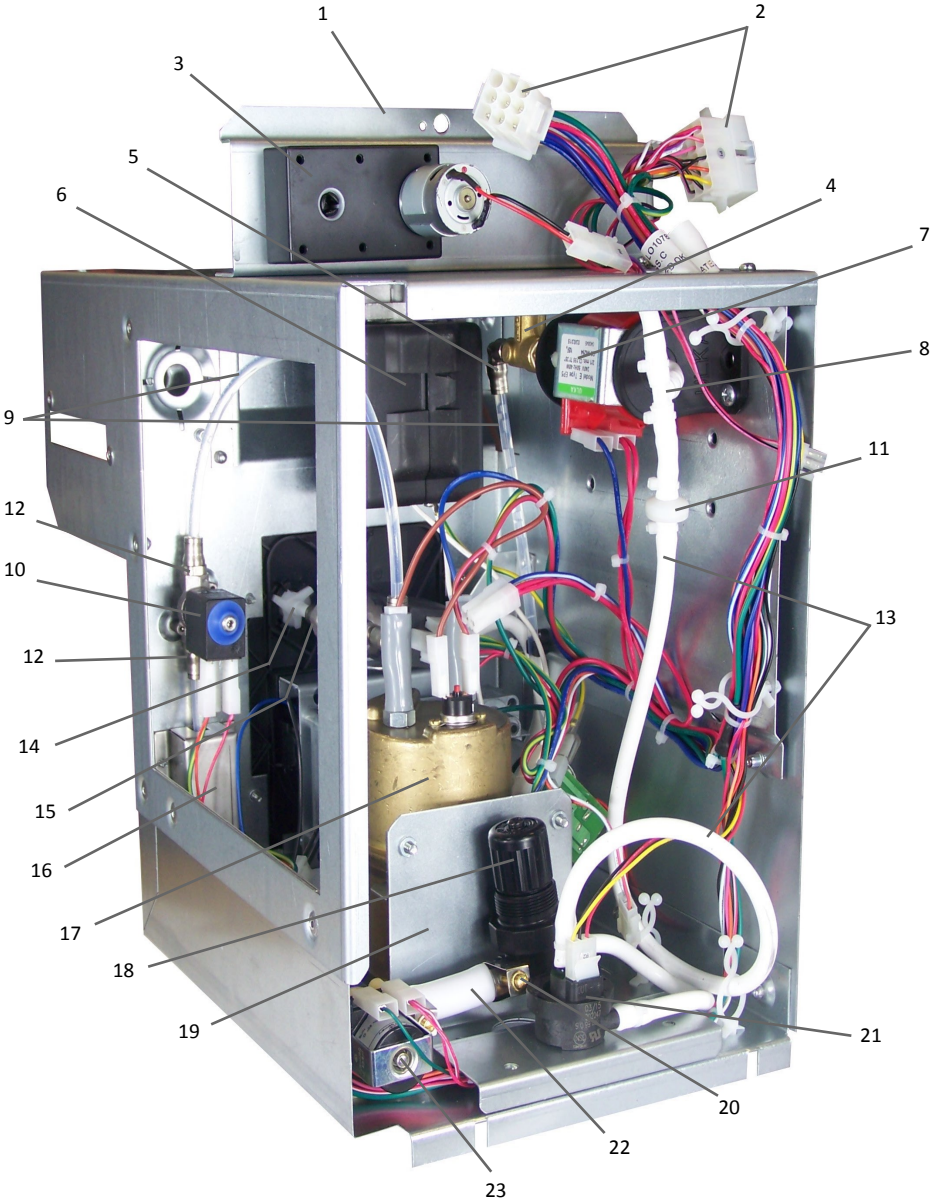

Co-Ex Module Assembly Parts List Continued

Ref No.	Part No.	Item Description
1	MT10775000	MOTOR BRKT COEX
2	LO10782001	LOOM B2C MODULE
3	MO10152001	MOTOR INGR. 24V DC 130RPM
4	VA10045001	12 BAR BYPASS VALVE
5	ME10208000	COUPLING EXT MALE ELBOW
6	MO10108001	GRINDER & MOTOR ASSY 230V
7	ME10047000	PUMP 240V
8	PL10246000	6MM TEE PIECE NYLON
9	HO10245000	6MM OD PFA TUBE
10	VA10042001	VALVE 2 WAY ESPRESSO
11	VA14521000	VALVE NON-RETURN 3/16"
12	ME10218000	COUPLING MALE STUD
13	SI10538000	SILICONE TUBING
14	ME10763000	WATER CONNECTION
15	VA14621001	3 WAY VALVE ASSY
16	VA10044000	VALVE PRESSURE RELIEF 3 BAR
17	BA10000001	PRESSURE BOILER ASSY (see page 51 for breakdown)
18	VA10048000	VALVE PRESS REDUCE 0.8BAR
19	MT10842000	MNTG BRKT COEX BOILER
20	FA03227000	CLIP,NO.19,UNEX
21	ME10834000	FLOW METER
22	HO06632000	HOSE HYDRAVEND 10 PIPE
23	VA13245000	VALVE INLET 24V DC
	ME07308000	GRINDER BLADES (not shown)
	ME11175000	GRINDER GEAR (not shown)

Pressure Boiler Assembly

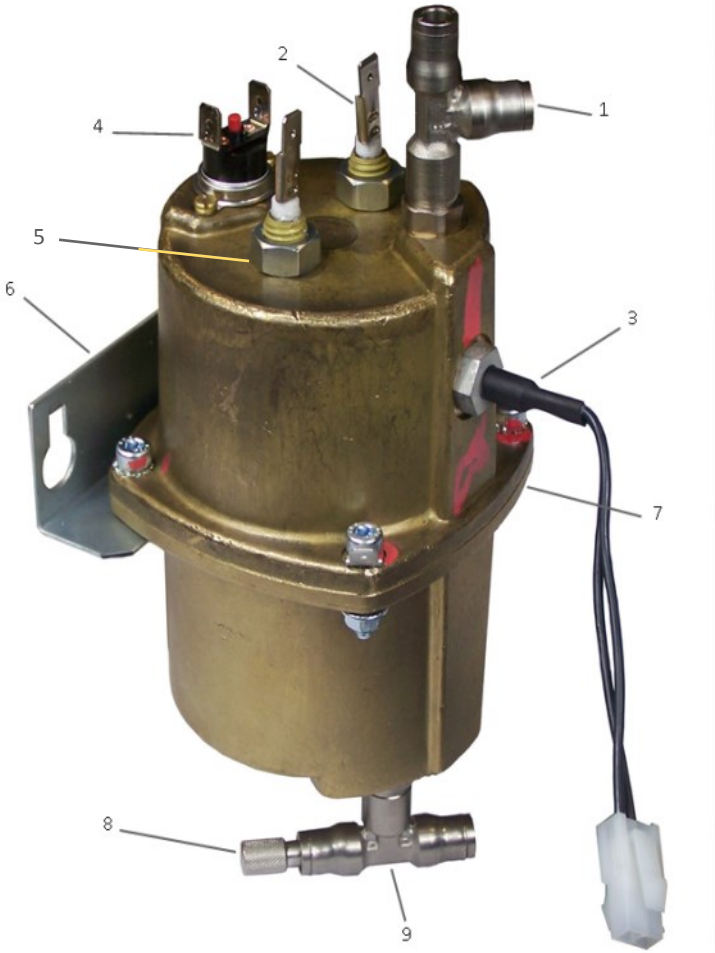

Pressure Boiler Assembly Parts List

Ref No.	Part No.	Item Description
1	ME10212000	COUPLING MALE STUD
2	EL10227000	ELEMENT
3	EL10228001	THERMISTOR HI PRESSURE
4	EL10954000	TEMPERATURE CUT OUT
5	ME10293000	ELEMENT SEAL (not shown)
6	MT10122000	BOILER BRACKET
7	ME10294000	O RING (not shown)
8	ME11186000	COUPLING BLANKING
9	ME10207000	COUPLING MALE BRANCH

Cold Unit

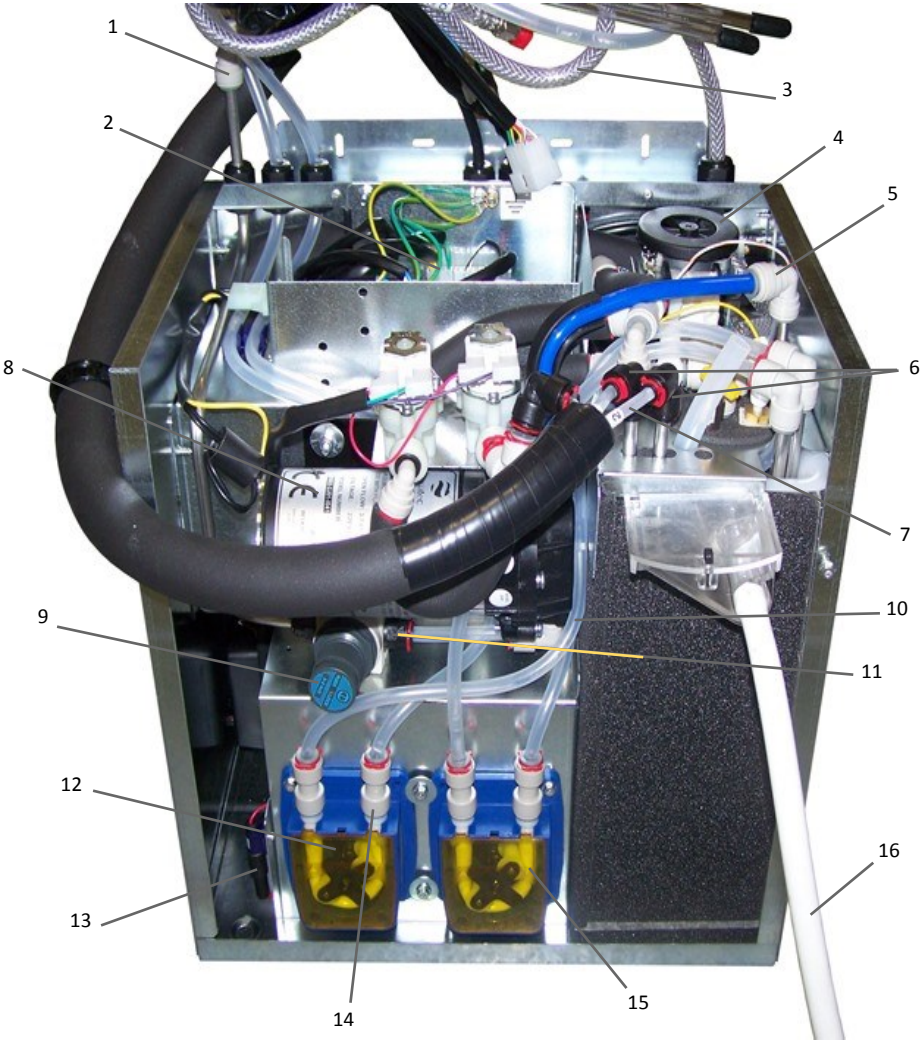

Cold Unit Parts List

Ref No.	Part No.	Item Description
	ME11087001	CARBONATED 2 SYRUP COLD UNIT
	ME11089000	STILL COLD UNIT 2 SYRUP
	ME11697000	STILL COLD UNIT NO SYRUP
1	C3638148	3/8”x3/8” JOHN GUEST CONNECTOR
2	EL11915000	CONTROL PCB
3	VA07921000	C02 PIPE ASSEMBLY
4	ME07238000	AGITATOR MOTOR ASSEMBLY
5	HO06729000	3/8”x5/16” JOHN GUEST ELBOW
6	HO06730000	5/16”X1/4” JOHN GUEST ELBOW
7	HO04989000	6MM CARBONATED WATER DISPENSE TUBE
8	ME10857000	AQUATECH WATER PUMP
9	ME03072000	WATER PRESSURE REGULATOR
10	HO04997000	8MM SYRUP DISPENSE TUBE
11	PL07182000	3/8”X10MM JOUHN GUEST REDUCER
12	ME11912000	PERISTELTIC SYRUP PUMP
13	D80492549	1AMP FUSE
14	PL12074000	5/16”X5/16” JOHN GUEST CONNECTOR
15	ME11913000	PERISTELTIC SYRUP PUMP TUBE
16	SI01142960	16MM O/D SILCONE TUBE
	ME03278000	CONDENSER FAN (not shown)
	ME06734000	CO2 REGULATOR (not shown)
	EL01155000	6AMP MAINS FILTER (not shown)
	ME02914000	C02 REGULATOR SEAL (not shown)

Note: Below kits contain all parts needed to change from hot only machine to chosen cold specification

Part No.	Item Description
VCC CARB 2S	CARBONATED 2 SYRUP KIT
VCC STILL 2S	STILL 2 SYRUP KIT
VCC STILL NS	STILL NO SYRUP KIT

Extract System

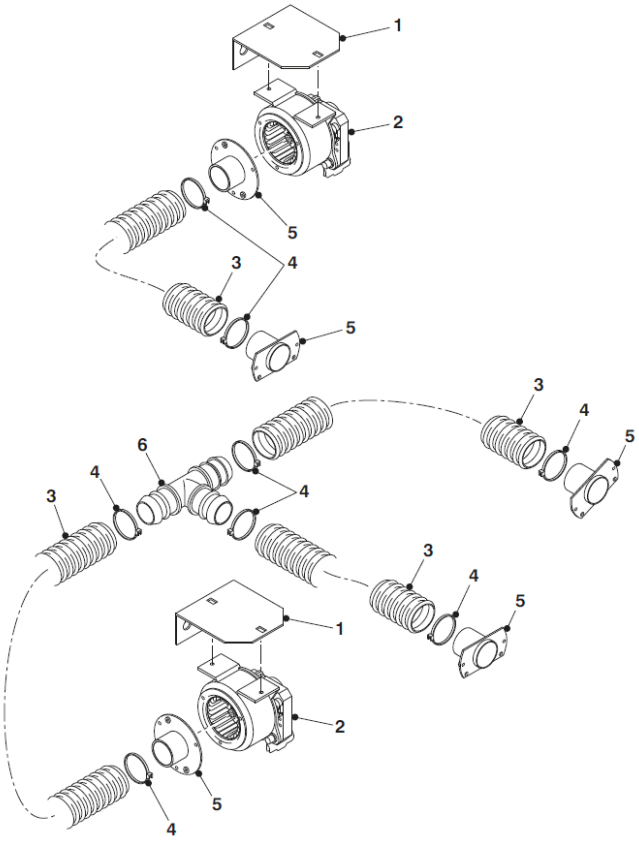

Ref No.	Part No.	Item Description
1	MT04132000	MOUNTING BRACKET
2	ME10182000	EXTRACT FAN 230V
3	HO01139000	HOSE
4	FA01188000	CABLE TIE
5	PL03083000	EXTRACT HOSE ADAPTOR
6	PL04165000	T PIECE

Waste Buckets

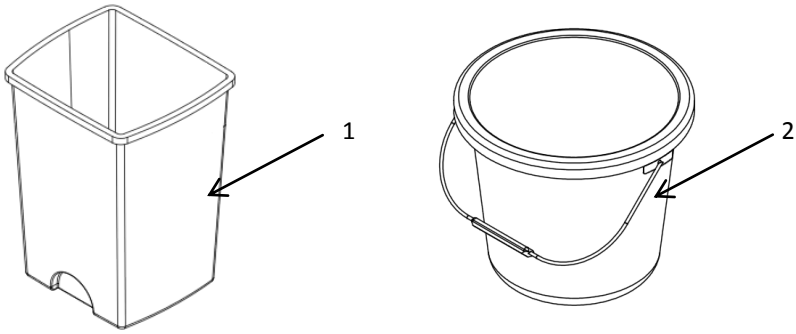

Ref No.	Part No.	Item Description
1	PL06672000	Bucket 24L FB Waste Grey
2	PL01172000	Silver Bucket 10L

Refrigeration Components

Ref No.	Image	Part No.	Item Description
1		VA11911000	DISPENSE VALVE 24VDC
2		ME11912000	SYRUP PUMP ASSEMBLY 24VDC
3		ME11913000	SYRUP PUMP TUBE
4		ME03072000	WATER PRESSURE REGULATOR
5		ME10857000	AQUATEC PUMP
6		ME07238000	AGITATOR ASSEMBLY
7		ME03278000	FAN UNIT
8		EL11915000	FRIDGE PCB MK4
9		VA07921000	CO2 CARB PIPE ASSEMBLY

Additional Refrigeration Components

Part No.	Item Description
HO04997000	CARB SYRUP DISPENSE PIPE
HO04989000	CARB WATER DISPENSE PIPE
PL11004000	FILLER BATH ASSEMEBLY
PL08703000	3/8” TUBE TO HOSE STEM
PL08702000	3/8” X 5/16” JOHN GUEST ELBOW
PL12074000	5/16” STRAIGHT EQUAL CONNECTOR
HO06730000	5/16” X 1/4” JOHN GUEST ELBOW
C3638147	5/16” X 3/8” STRAIGHT CONNECTOR
EL08784000	COMPRESSOR START CAPACITOR
EL08785000	COMPRESSOR START RELAY
EL08786000	COMPRESSOR THERMAL CUTOUT
D80492549	20MM 1AMP FUSE
VA07921000	CO2 CARBONATOR PIPE ASSEMBLY
ME06734000	CO2 REGULATOR ODL
ME02914000	CO2 REGULATOR SEAL
ME13118000	DISPENSE HARNESS
ME08729000	7MM - 8.7MM OETIKER CLIP
ME08730000	8.8MM to 10.5MM OETIKER CLIP
EL01155000	6 AMP MAINS FILTER
MT13548000	MAINS FILTER MOUNTING PLATE
MT13549000	MAINS FILTER COVER

Fastener Parts List

Part No.	Item Description
FA10203000	M3 NYLOC NUT
FA01499000	M3 PLAIN NUT
FA01498000	M3 X 6 POZI PAN SCREW
FA10205000	M3 X 10 POZI PAN SCREW
FA05206000	M3 X 16 CSK SCREW
FA01503000	M3 X 16 POZI PAN SCREW
FA04422000	M4 SHAKEPROOF WASHER
FA01501000	M4 PLAIN WASHER
FA01506000	M4 HEX FULL NUT
FA03262000	M4 NYLOC NUT
FA03289000	M4 ST/STL NYLOC NUT
FA01502000	M4 X 6 POZI PAN SCREW
FA02431000	M4 X 8 ST/STL POZI PAN SCREW
FA10807000	M4 X 10 TAPTITE SCREW
FA01504000	M4 X 10 POZI PAN SCREW
FA01143000	M4 X 10 ST/STL SET SCREW
FA07111000	M4 X 10 THUMB SCREW
FA04340000	M4 X 16 POZI PAN SCREW
FA02029000	M4 X 20 POZI PAN SCREW
FA04301000	M4 SKIFFY NUT

Fastener Parts List Continued

Part No.	Item Description
FA01507000	M5 PLAIN WASHER
FA01555000	M5 ST/STL SHAKEPROOF WASHER
FA01508000	M5 FULL NUT
FA01683000	M5 NYLOC
FA13305000	M5 FLANGED NYLOC NUT
FA01509000	M5 X 10 POZI PAN SCREW
FA04431000	M5 X 10 TAPTITE SCREW
FA05210000	M5 X 10 CHEESE HEAD SCREW
FA01682000	M5 X 16 POZI PAN SCREW
FA10863000	M5 X 25 CARRIAGE BOLT
FA01416000	M5 SKIFFY THUMB NUT
FA01561000	1/4 ZP PLAIN WASHER
FA01487000	1/4“ FEMALE CONNECTOR
FA01488000	FEMALE SPADE CONNECTOR BOOT
FA01489000	1/4” MALE SPADE CONNECTOR
FA14890000	MALE SPADE CONNECTOR BOOT
FA01188000	MEDIUM CABLE TIE
FA01860000	SMALL CABLE TIE
FA01189000	CABLE TIE HOLDER
FA10222000	PCB SUPPORT
FA03227000	19MM UNEX CLIP

Visit the **Tech Zone** on our website to find this and other manuals and technical information for the Crane range

www.cranems.co.uk/

CRANE® MERCHANDISING SYSTEMS

Pipsmore Park, Bumpers Farm Industrial Estate
Chippenham , Wiltshire, SN14 6NQ
Tel: +44 (0) 1249 444807 Fax: +44 (0) 1249 44819
Email: sales@cranems.co.uk
Website: www.cranems.co.uk